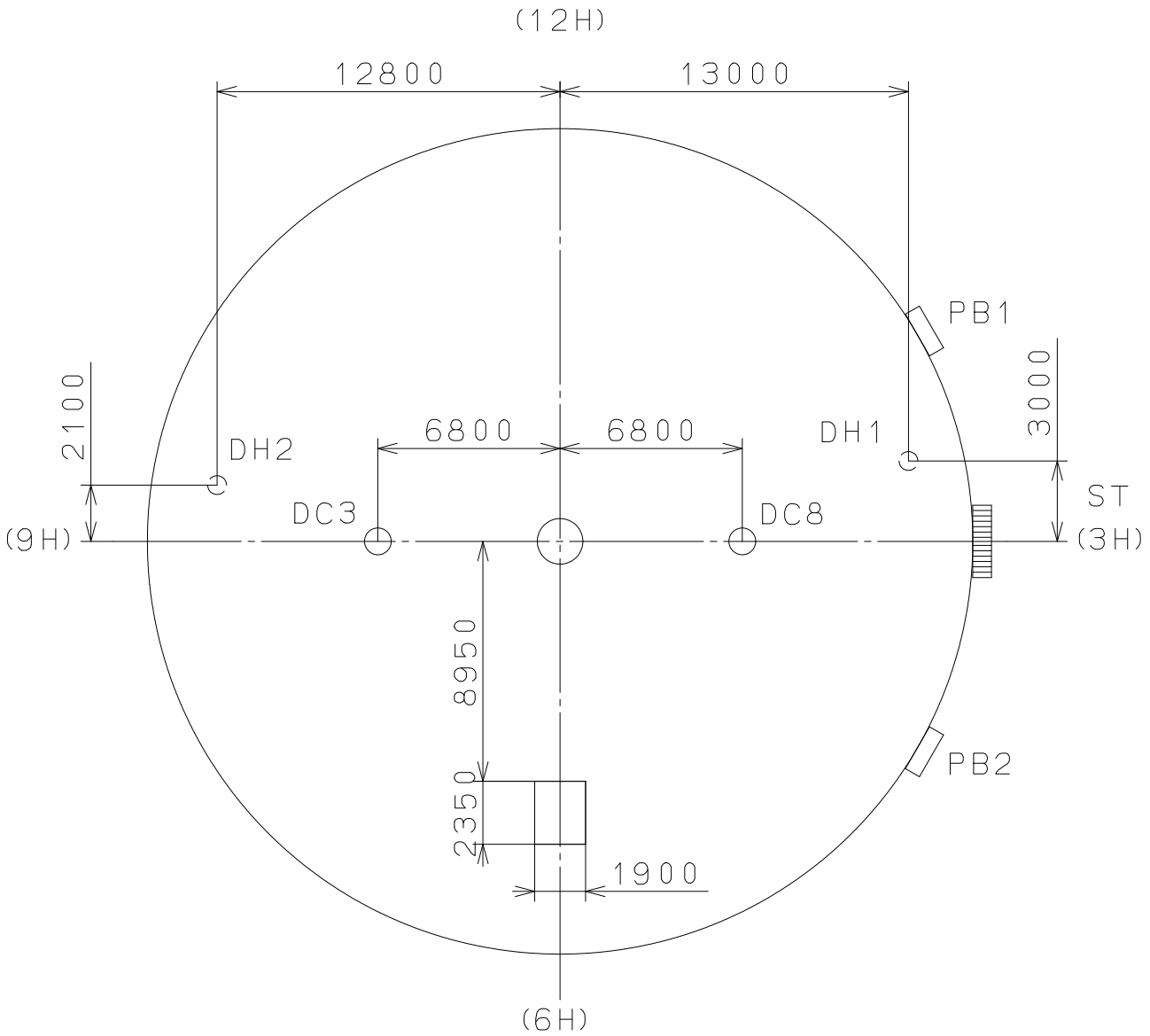

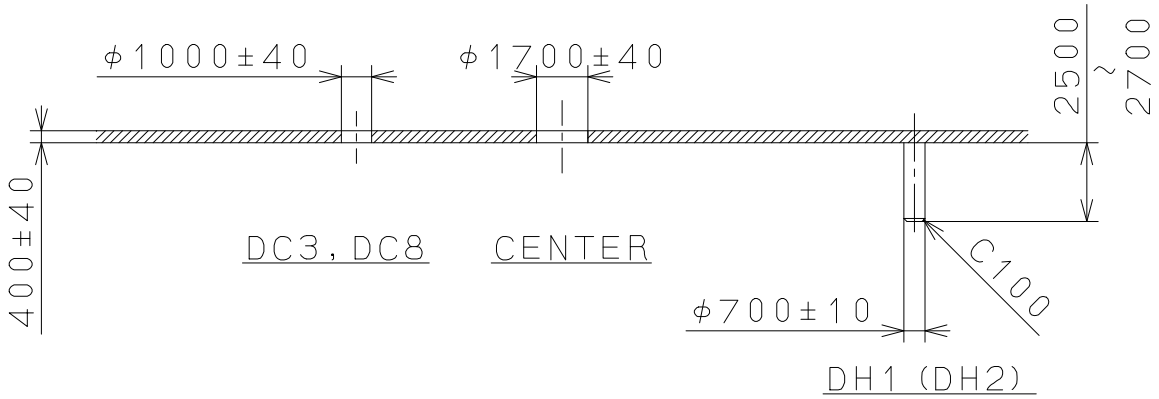

5			Quantity		Cal.NO.: 0S21-10Q
4			Unit	1/1000mm	
3			Scale	4 : 1	Parts No.:
2			Date		
1			Drawn		
Mark	Date	Description Appro.	Checked	D.Yamada	Name:
Alterations			Approved		Indications for Dial
Material					Drawing No.: 0S2101D0
Heat Treatment			General Tolerances		MIYOTA
Hardness			Dimensions		
Plating			Angles		CITIZEN WATCH CO.,LTD. TOKYO,JAPAN

CONFIDENTIAL 2023/03/08 (11:59:45)
This drawing is provisional and subject to our reconfirmation and/or revision without notice.