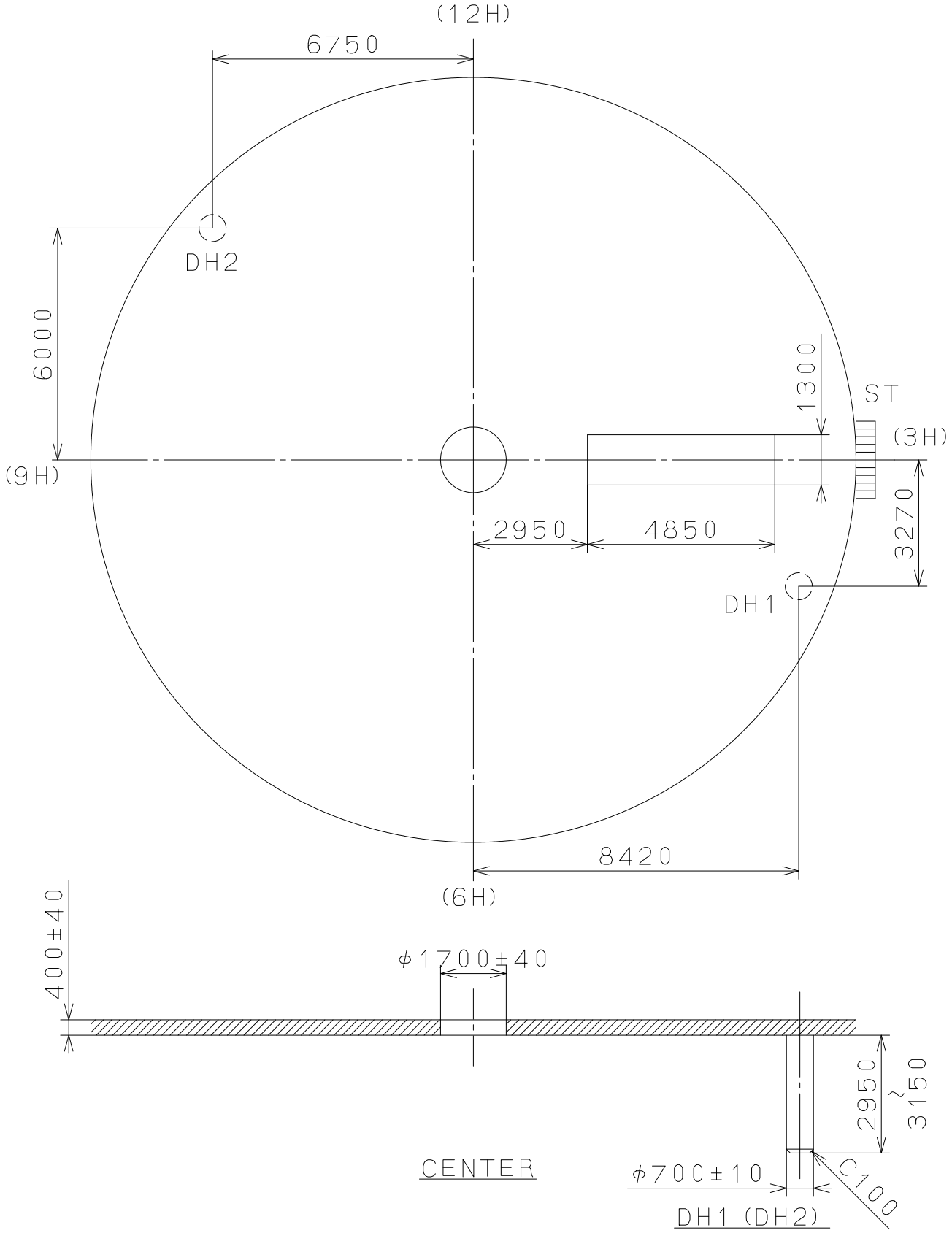


| | | | | | |
|---|---|---|---|---|---|
| 5 | | | Quantity | | Cal.NO.: 6T51-AAQ |
| 4 | | | Unit | 1/1000mm | |
| 3 | | | Scale | 7 : 1 | Parts No.: |
| 2 | | | Date | | |
| 1 | | | Drawn | | |
| Mark | Date | Description Appro. | Checked | D.Yamada | Name: |
| Alterations | | | Approved | | Indications for Dial |
| Material | | | | | Drawing No.:6T5100D0 |
| Heat Treatment | | | General Tolerances | | MIYOTA |
| Hardness | | | Dimensions | | |
| Plating | | | Angles | | CITIZEN WATCH CO.,LTD. TOKYO,JAPAN |

CONFIDENTIAL 2023/03/07 (15:13:18)
This drawing is provisional and subject to our reconfirmation and/or revision without notice.