CONFIDENTIAL 2023/03/17 (16:17:31)
This drawing is provisional and subject to our reconfirmation and/or revision without notice.

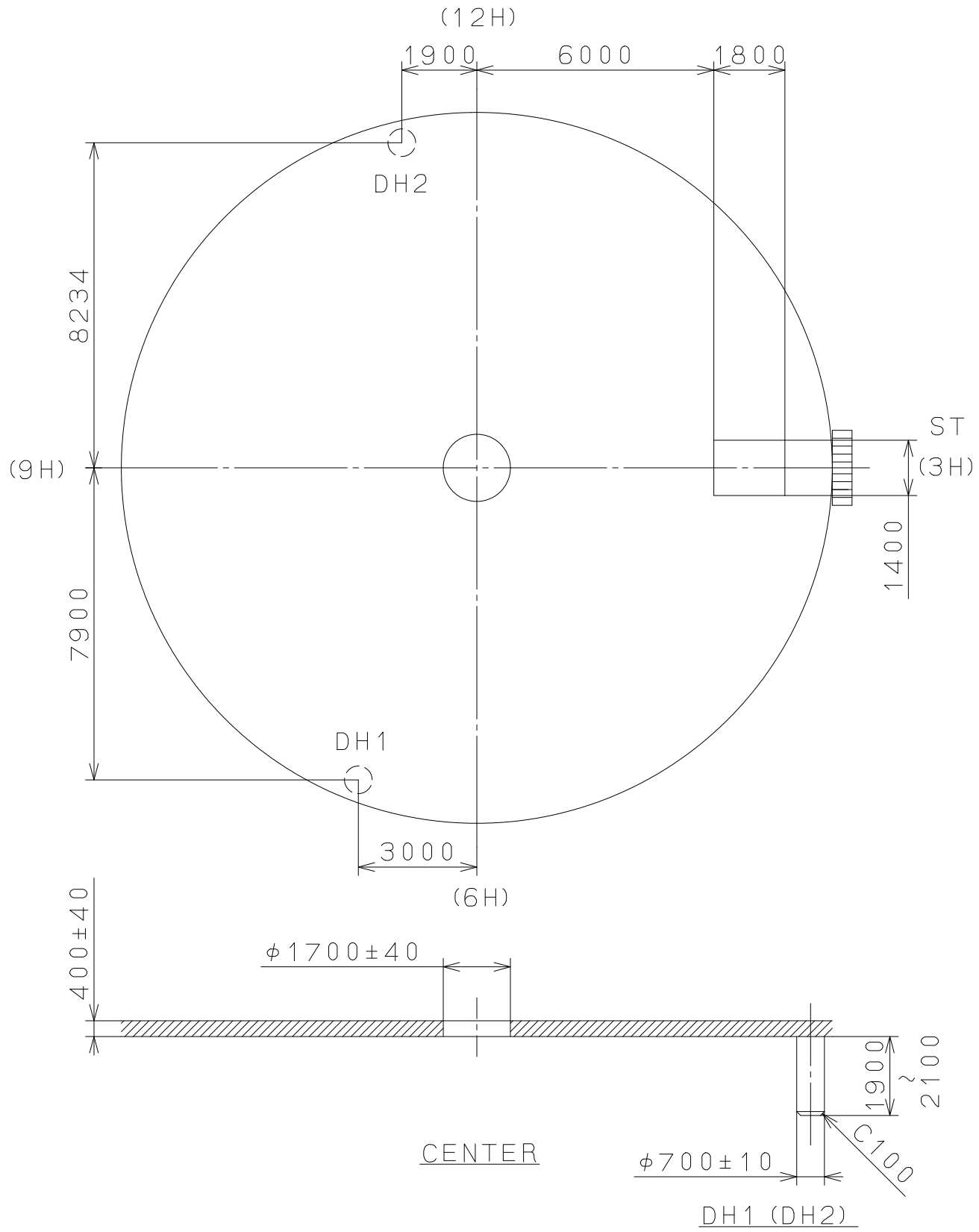

5			Quantity		Cal.NO.: 9T15-00A
4			Unit	1/1000mm	
3			Scale	7 : 1	Parts No.:
2			Date		
1			Drawn		
Mark	Date	Description Appro.	Checked	D.Yamada	Name:
Alterations			Approved		Indications for Dial
Material					Drawing No.:9T1500D0
Heat Treatment			General Tolerances		MIYOTA
Hardness			Dimensions		
Plating			Angles		CITIZEN WATCH CO.,LTD. TOKYO,JAPAN